Linear Encoder LE200

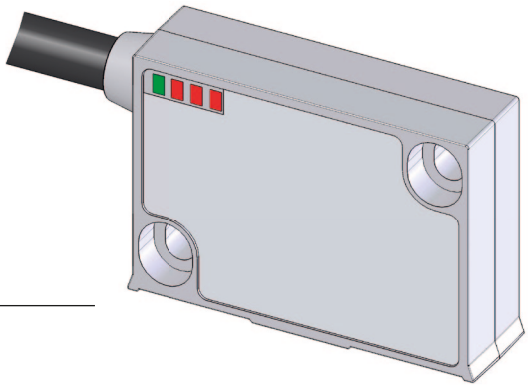

SIKO GmbH

Address
Weihermattenweg 2
79256 Buchenbach

Telephone
+49 7661 394-0
Fax
+49 7661 394-388

eMail
info@siko.de
Internet
www.siko.de

Features:

- robust metal housing
- LED status display
- easy mounting
- signal period 2000 µm
- scale MB200
- insensitive to dust, shavings, humidity

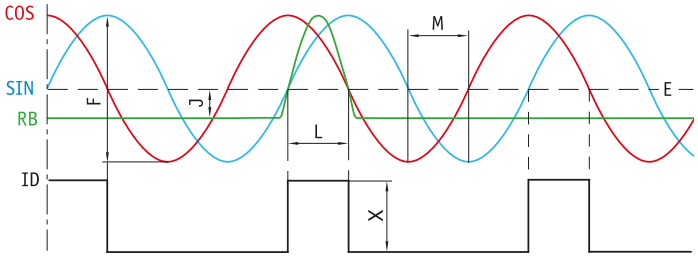

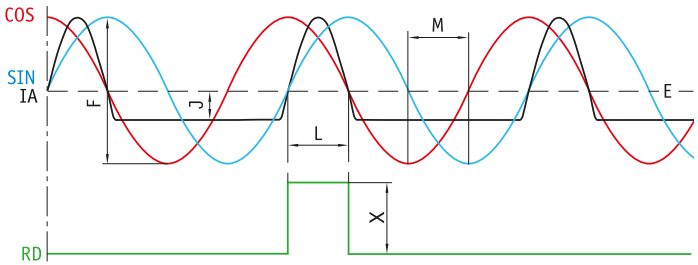

Signals:
E: reference voltage 2,5 V ±100 mV
F: 1 Vpp ±10 %
J: ≥ 0,2 V
L: 100° ±20°
M: 90° ±1,0° / < ±3° (20 m/s)
X: 1 Vpp

Feature	Order text			Additional information
Operating voltage	10	A	10,5 ... 30 VDC	
	5		5 VDC ±5 %	
Design	M	B		
	AM		Form A, metal	
Connection	E1	C		
	E6X			
	E6			
Cable length L (in m)	...	D		max. 20,0 m
Cable length L2 (in m)	...	E		L + L2 = max. 20,0 m
Reference signal	0	F	without	
	IA		periodic index (analog)	all 2 mm index signal
	ID		periodic index (digital)	all 2 mm index signal
	RB		fixed, tape side (analog)	
	RD		fixed, tape side (digital)	

Your ordering: LE200 – [ ] – [ ] – [ ] – [ ] – [ ] – [ ]
A B C D E F

Subject to technical alternation • Art.No. 84884; Mod. status 459/12

Linear Encoder LE200

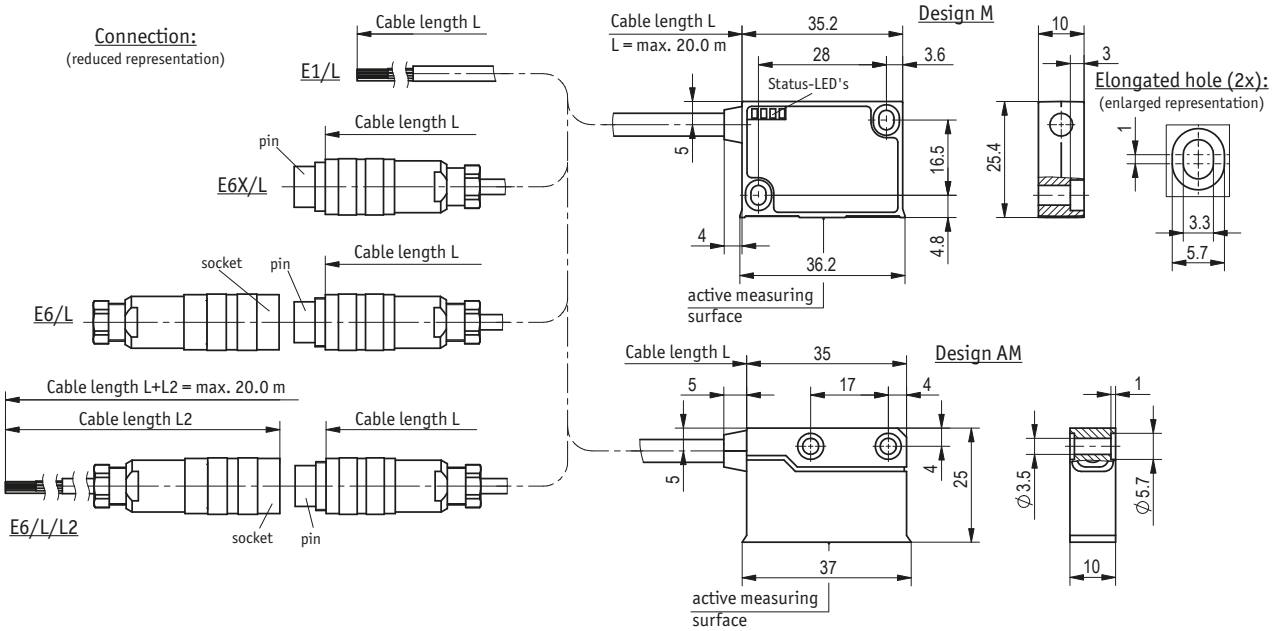

viewing side = plug-in side
pin insert

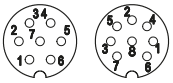

Pin-/ cable assignment signals inverted

Signal	GND	sin	/sin	cos	/cos	+UB	- - -
E1	black	red	orange	yellow	green	brown	- - -
E6	1	2	3	4	5	6	7

Pin-/ cable assignment signals inverted with index signal

Signal	sin	cos	idx	+UB	GND	/sin	/cos	/idx
E1	red	yellow	blue	brown	black	orange	green	violet
E6	1	2	3	4	5	6	7	8

Travel direction:

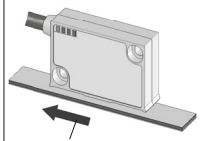

Travel direction sensor, sine before cosine

Technical data		Additional information
Mechanical data:		
Housing	zinc/aluminium die casting, nickelized	
Sensor cable	PUR, drag chain-compatible	6, 8 wire ø5$_{-0,4}$ mm
Bending radius min.	>25mm statical; >50mm dynamical	
Weight	30 g (without cable)	
Electrical data:		
Power supply	10,5 ... 30 VDC; 5 VDC ±5 %	
Power consumption	<25 mA @24 VDC; <50 mA	
Output voltage	Sin, Cos, Idex, differential	(1 Vpp ±10 % @ 0° ... 70 °C)
Output impedance	0 Ω (Rload > 100 Ω), schort-circuit-resistant	
max. output per core	60 mA peak, 5 sec.	
Offset mean value of sine to GND	2,5 V; ±100 mV (10,5 VDC ... 30 VDC) /	VCC/2 ±100 mV (5 VDC)
mean value of cosine to GND	2,5 V; ±100 mV (10,5 VDC ... 30 VDC) /	VCC/2 ±100 mV (5 VDC)
max. travel speed	25 m/s; with ref. RB or RD 5 m/s	
Phase position of reference signal	90° ±1°; <±3° (20 m/s)	
Phase width of reference signal	Sin 45°; Cos 135°	
Harmonic distortion	<1 %	
Interference protection class	3 IEC801	
Test mark	CE	
Environmental conditions:		
Working temperature	-10 °C ... +70 °C	
Storage temperature	-30 °C ... +80 °C	
Humidity	max. 95 %rF	
Type of protection	IP67	
Virbration	<200 m/s² (50 Hz ... 2000 Hz)	
Shock	<300 m/s² (11 ms)	
System data, resolution and accuracy:		
Suitable magnetic	MB200 / MR200 / MBR200	
Signal period	2000 µm	
System accuary	25 µm	
Repeat accuary	4 µm unidirectional	
Sensor/magnetic strip gap	0,1 - 0,8 mm (at reference signal 0+IA+IB) 0,1 - 0,5 mm (at reference signal RB+RD)	
Accessory	2x hexagon socket head cap screw	(ISO 4762-M3x14) seperately enclosed
	2x lock washer	(3 DIN 7980) seperately enclosed

Subject to technical alternation • Art.No. 84884; Mod. status 459/12