LS2, LS2_K, LS2_H series

Light Curtains

Type 2 according to IEC 61496-1 and 2

features

- Compact housing (28 x 30 mm) and no dead zone on cap side
- Resolution 30, 40, 50, 90 mm for hand protection and presence control and 2, 3, 4 beams for body protection/access control
- Controlled distance up to: 3, 4,10, 12 m
- Base, Standard versions and Master, Slave version to connect up to 3 sets in cascade configuration
- Selectable Automatic/Manual Restart and EDM integrated functions (Standard models)
- Selectable controlled distance
- IP69K protection models (LS2_K) and models with integrated heating system to reach -25°C operating temperature (LS2_H)
- Standard M12 da 5 and 8 poles connectors

web contents

- Application notes
- Photos
- Catalogue / Manuals

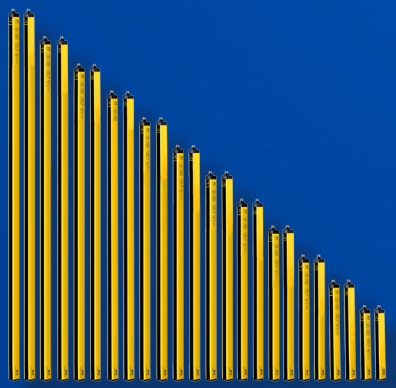

IP69K CE c UL us TÜV

code description

LS2 ER / 30 - 015 [ ] [ ]

series	LS2	Type 2 Safety light Curtains 28 x 30 mm compact housing
E/R	ER	Emitter / Receiver couple
beams	30	Light grid, 30 mm resolution, hand protection
	40	Light grid, 40 mm resolution, hand protection
	50	Light grid, 50 mm resolution, presence control
	90	Light grid, 90 mm resolution, presence control
	0A	2 beams; body protection, 500 mm resolution
	0B	3 beams; body protection, 400 mm resolution
	0C	4 beams; body protection, 300 mm resolution
area	015 ÷ 180	Protected height from 150 to 1,800 mm (light grids)
	050 ÷ 090	Protected height 500, 800, 900 mm (multiple light beams)
model		Standard model with selectable MANUAL/AUTOMATIC Restart and EDM functions
	B	Base model with integrated AUTOMATIC Restart
	M	Master Model with selectable functions
	S	Intermediate Slave model
	F	Final Slave model
protection		IP65 and IP67 protection, 10° ... 55 °C operating temperature
	K	Models in transparent cylindrical housing, IP69K, suitable for applications in the food industry. Resistance to washing with water at 100 bar, 80 °C Housing in PMMA, caps in POM C with silicone seals. Brackets in stainless steel AISI 316L. Operating temperature -10 ... 55 °C.
	H	Models in transparent cylindrical casing, IP69K protection, thermostated, suitable for applications in the food industry. Resistance to washing with water at 100 bar, 80 °C. Housing in PMMA, POM C caps and silicone seals. Brackets in stainless steel AISI 316L. Operating temperature -25 ... 55 °C.

available models

30 mm resolution; 0...4 / 0...12 m controlled distance

protected height (mm)	n° of beams	response time (ms)	series
160	8	4.5	LS2ER/30-015B
			LS2ER/30-015
			LS2ER/30-015F
310	16	6	LS2ER/30-030B
			LS2ER/30-030
			LS2ER/30-030M
			LS2ER/30-030F
			LS2ER/30-030S
460	23	8	LS2ER/30-045B
			LS2ER/30-045
			LS2ER/30-045M
			LS2ER/30-045F
			LS2ER/30-045S
610	31	10	LS2ER/30-060B
			LS2ER/30-060
			LS2ER/30-060M
			LS2ER/30-060F
			LS2ER/30-060S
760	38	11	LS2ER/30-075B
			LS2ER/30-075
			LS2ER/30-075M
			LS2ER/30-075F
			LS2ER/30-075S
910	46	13	LS2ER/30-090B
			LS2ER/30-090
			LS4ER/30-090M
			LS2ER/30-090F
			LS2ER/30-090S
1,060	53	14.5	LS2ER/30-105B
			LS2ER/30-105
			LS2ER/30-105M
			LS2ER/30-105F
			LS2ER/30-105S
1,210	61	16	LS2ER/30-120B
			LS2ER/30-120
			LS2ER/30-120M
			LS2ER/30-120F
			LS2ER/30-120S
1,360	68	17.5	LS2ER/30-135B
			LS2ER/30-135
			LS2ER/30-135M
			LS2ER/30-135F
			LS2ER/30-135S
1,510	76	19.5	LS2ER/30-150B
			LS2ER/30-150
			LS2ER/30-150M
			LS2ER/30-150F
			LS2ER/30-150S
1,660	83	21	LS2ER/30-165
1,810	91	22.5	LS2ER/30-180

available models

40 mm resolution; 0...4 / 0...12 m controlled distance

protected height (mm)	n° of beams	response time (ms)	series
160	6	4	LS2ER/40-015B
			LS2ER/40-015
			LS2ER/40-015F
310	11	5	LS2ER/40-030B
			LS2ER/40-030
			LS2ER/40-030M
			LS2ER/40-030F
			LS2ER/40-030S
460		6	LS2ER/40-045B
			LS2ER/40-045
			LS2ER/40-045M
			LS2ER/40-045F
			LS2ER/40-045S
610	21	7.5	LS2ER/40-060B
			LS2ER/40-060
			LS2ER/40-060M
			LS2ER/40-060F
			LS2ER/40-060S
760	26	8.5	LS2ER/40-075B
			LS2ER/40-075
			LS2ER/40-075M
			LS2ER/40-075F

available models

40 mm resolution; 0...4 / 0...12 m controlled distance

protected height (mm)	n° of beams	response time (ms)	series
760	26	8.5	LS2ER/40-075S
910	31	9.5	LS2ER/40-090B
			LS2ER/40-090
			LS2ER/40-090M
			LS2ER/40-090F
			LS2ER/40-090S
1,060	36	10.5	LS2ER/40-105B
			LS2ER/40-105
			LS2ER/40-105M
			LS2ER/40-105F
			LS2ER/40-105S
1,210	41	11.5	LS2ER/40-120B
			LS2ER/40-120
			LS2ER/40-120M
			LS2ER/40-120F
			LS2ER/40-120S
1,360	46	13	LS2ER/40-135B
			LS2ER/40-135
			LS2ER/40-135M
			LS2ER/40-135F
			LS2ER/40-135S
1,519	51	14	LS2ER/40-150B
			LS2ER/40-150
			LS2ER/40-150M
			LS2ER/40-150F
			LS2ER/40-150S

available models

50 mm resolution; 0...4 / 0...12 m controlled distance

protected height (mm)	n° of beams	response time (ms)	series
160	4	3.5	LS2ER/50-015B
			LS2ER/50-015
			LS2ER/50-015F
310	8	4.5	LS2ER/50-030B
			LS2ER/50-030
			LS2ER/50-030M
			LS2ER/50-030F
			LS2ER/50-030S

available models

50 mm resolution; 0...4 / 0...12 m controlled distance

protected height (mm)	n° of beams	response time (ms)	series
460	12	5.5	LS2ER/50-045B
			LS2ER/50-045
			LS2ER/50-045M
			LS2ER/50-045F
			LS2ER/50-045S
610	16	6	LS2ER/50-060B
			LS2ER/50-060
			LS2ER/50-060M
			LS2ER/50-060F
			LS2ER/50-060S
760	20	7	LS2ER/50-075B
			LS2ER/50-075
			LS2ER/50-075M
			LS2ER/50-075F
			LS2ER/50-075S
910	24	8	LS2ER/50-090B
			LS2ER/50-090
			LS4ER/50-090M
			LS2ER/50-090F
			LS2ER/50-090S
1,060	28	9	LS2ER/50-105B
			LS2ER/50-105
			LS2ER/50-105M
			LS2ER/50-105F
			LS2ER/50-105S
1,210	32	10	LS2ER/50-120B
			LS2ER/50-120
			LS2ER/50-120M
			LS2ER/50-120F
			LS2ER/50-120S
1,360	36	10.5	LS2ER/50-015B
			LS2ER/50-015
			LS2ER/50-015F
			LS2ER/50-030B
			LS2ER/50-030
1,510	40	11.5	LS2ER/50-030M
			LS2ER/50-030F
			LS2ER/50-030S
			LS2ER/50-045B
			LS2ER/50-045

available models

90 mm resolution; 0...4 / 0...12 m controlled distance

protected height (mm)	n° of beams	response time (ms)	series
310	4	3.5	LS2ER/90-030B
			LS2ER/90-030
			LS2ER/90-030M
			LS2ER/90-030F
			LS2ER/90-030S
460	6	4	LS2ER/90-045B
			LS2ER/90-045
			LS2ER/90-045M
			LS2ER/90-045F
			LS2ER/90-045S
610	8	4.5	LS2ER/90-060B
			LS2ER/90-060
			LS2ER/90-060M
			LS2ER/90-060F
			LS2ER/90-060S
760	10	5	LS2ER/90-075B
			LS2ER/90-075
			LS2ER/90-075M
			LS2ER/90-075F
			LS2ER/90-075S
910	12	5.5	LS2ER/90-090B
			LS2ER/90-090
			LS2ER/90-090M
			LS2ER/90-090F
			LS2ER/90-090S
1,060	14	6	LS2ER/90-105B
			LS2ER/90-105
			LS2ER/90-105M
			LS2ER/90-105F
			LS2ER/90-105S
1,210	16	6	LS2ER/90-120B
			LS2ER/90-120
			LS2ER/90-120M
			LS2ER/90-120F
			LS2ER/90-120S
1,360	18	6.5	LS2ER/90-135B
			LS2ER/90-135
			LS2ER/90-135M
			LS2ER/90-135F
			LS2ER/90-135S
1,510	20	7	LS2ER/90-150B
			LS2ER/90-150

available models

500 mm resolution; 0...4 / 0...12 m controlled distance

protected height (mm)	n° of beams	response time (ms)	series
510	2	3	LS2ER/0A-050B
			LS2ER/0A-050
			LS2ER/0A-050M
			LS2ER/0A-050F
			LS2ER/0A-050S

available models

400 mm resolution; 0...4 / 0...12 m controlled distance

protected height (mm)	n° of beams	response time (ms)	series
310	3	3.5	LS2ER/0B-080B
			LS2ER/0B-080
			LS2ER/0B-080M
			LS2ER/0B-080F
			LS2ER/0B-080S

available models

300 mm resolution; 0...4 / 0...12 m controlled distance

protected height (mm)	n° of beams	response time (ms)	series
910	4	3.5	LS2ER/0C-090B
			LS2ER/0C-090
			LS2ER/0C-090M

available models

30 mm resolution; 0...3 / 0...10 m controlled distance

protected height (mm)	n° of beams	response time (ms)	series
160	8	4.5	LS2ER/30-015K
310	16	6	LS2ER/30-030K
460	23	8	LS2ER/30-045K
610	31	10	LS2ER/30-060K
760	38	11	LS2ER/30-075K
910	46	13	LS2ER/30-090K
1,060	53	14.5	LS2ER/30-105K
1,210	61	16	LS2ER/30-120K
1,360	68	17.5	LS2ER/30-135K
1,510	76	19.5	LS2ER/30-150K

available models

30 mm resolution; 0...3 / 0...10 m controlled distance

protected height (mm)	n° of beams	response time (ms)	series
160	8	4.5	LS2ER/30-015H
310	16	6	LS2ER/30-030H
460	23	8	LS2ER/30-045H
610	31	10	LS2ER/30-060H
769	38	11	LS2ER/30-075H
910	46	13	LS2ER/30-090H
1,060	53	14.5	LS2ER/30-105H
1,210	61	16	LS2ER/30-120H
1,360	68	17.5	LS2ER/30-135H
1,510	76	19.5	LS2ER/30-150H

available models

0...3 / 0...10 m controlled distance

n° of beams	protected height (mm)	controlled area (mm)	response time (ms)	series
2	500	510	4.5	LS2ER/0A-050K
3	400	810	6	LS2ER/0B-080K
4	300	910	8	LS2ER/0C-090K

n° of beams	protected height (mm)	controlled area (mm)	response time (ms)	series
2	500	510	4.5	LS2ER/0A-050H
3	400	810	6	LS2ER/0B-080H
4	300	910	8	LS2ER/0C-090H

technical specifications

	LS2ER/**-***_	
operating voltage	19.2...28.8 Vdc	PELV power supplier according to EN 60204-1 Cap.6.4
power consumption, Receiver	2 W	no load
power consumption, Emitter	1 W	
power consumption, heater	2...10 W	H models, IP69K with heater
output type	2 x PNP	OSSD safety outputs
output current	400 mA	higher values are considered overload
equivalent resistive load	60 Ω	lower values are considered short circuit
capacitive load	0.82 µF	lower values may be considered short circuit
recovery time	2 s	
response time	2.5...20 ms	
effective aperture angle	± 5°	IEC 61496-1
artificial light rejection	according to IEC 61496-2	according to the reported standards
ambient light rejection	according to IEC 61496-2	
IP mechanical protection (standard models)	IP65 and IP67	without any additional precaution the device can't be used for outdoor applications
IP mechanical protection (special models)	IP65, IP67 and IP69K	external transparent tube resistant against 100 bar water jets
operating temperature	-10...+55°C	no condensation
operating temperature, K models	-10...+55°C	no condensation, models without internal heater
operating temperature, H models	-25...+55°C	models with internal heater
storage temperature	-25...+70°C	to be respected also during transportation
humidity	95%	no condensation
vibrations	according to IEC 61496-1	according to the reported standards
shocks	according to IEC 61496-1	
cable length (power supply/outputs)	100 m	cable section 0.34 mm2 (to respect max length)
max cable legth for Master Slave interconnections	50 m	
dimension (IP67 models)	28 (front) x 30 mm	painted aluminium RAL 1012
tube (IP69K models)	ø 56 mm	
connectors models LS2ER/**-***B	Emitter 1 x M12, 5p, male Receiver 1 x M12, 5p male	
connectors models LS2ER/**-***	Emitter 1 x M12, 5p, male Receiver 1 x M12, 8p male	
connectors models LS2ER/**-***M	Emitter 2 x M12, 5p, male Receiver 1 x M12, 8p male + 1 x M12, 5p male	
connectors models LS2ER/**-***S	Emitter 2 x M12, 5p, male Receiver 2 x M12, 5p male	
connectors models LS2ER/**-***F	Emitter 1 x M12, 5p, male Receiver 1 x M12, 5p male	
connectors models LS2ER/**-***K	Emitter cable 5 wires Receiver cable 8 wires	
connectors models LS2ER/**-***H	Emitter cable 8 wires Receiver cable 10 wires	

safety parameters

LS2ER/30-***_	015	030	045	060	075	090	105	120	135	150	165	180
height (mm)	160	310	460	610	760	910	1,060	1,210	1,360	1,510	1,660	1,810
number of beams	8	16	23	31	38	46	53	61	68	76	83	91
response time (ms)	4.5	6	8	10	11	13	14.5	16	17.5	19.5	21	22.5
response time Master + Slave (ms)	Ttot = [0.1104 * (Nr Slave1 + Nr Master) + 1.1044] * 2 (Master + 1 Slave)											
response time Master + 2 Slave (ms)	Ttot = [0.1104 * (Nr Slave1 + Nr Slave2 + Nr Master) + 1.3228] * 2 (Master + 2 Slave)											
Type (1)	2											
SIL(2)	1											
SILCL (3)	1											
PL (4)	c											
PFHd	2.04E-08	2.66E-08	3.30E-08	3.92E-08	4.57E-08	5.19E-08	5.83E-08	6.45E-08	7.09E-08	7.71E-08	8.35E-08	8.98E-08
DCavg	91.30%	91.00%	90.90%	90.70%	90.60%	90.60%	90.50%	90.50%	90.40%	90.40%	90.40%	90.30%
MTTFd (years)	100											
CFF	80%											

LS2ER/40-***_	015	030	045	060	075	090	105	120	135	150
height (mm)	160	310	460	610	760	910	1,060	1,210	1,360	1,510
number of beams	6	11	16	21	26	31	36	41	46	51
response time (ms)	4	5	6	7.5	8.5	9.5	10.5	11.5	13	14
response time Master + Slave (ms)	Ttot = [0.1104 * (Nr Slave1 + Nr Master) + 1.1044] * 2 (Master + 1 Slave)									
response time Master + 2 Slave (ms)	Ttot = [0.1104 * (Nr Slave1 + Nr Slave2 + Nr Master) + 1.3228] * 2 (Master + 2 Slave)									
Type (1)	2									
SIL(2)	1									
SILCL (3)	1									
PL (4)	c									
PFHd	1.83E-08	2.29E-08	2.73E-08	3.18E-08	3.63E-08	4.08E-08	4.53E-08	4.98E-08	5.43E-08	5.88E-08
DCavg	94.60%	93.80%	93.20%	92.80%	92.40%	92.20%	92.00%	91.80%	91.70%	91.50%
MTTFd (years)	100									
CFF	80%									

LS2ER/50-***_	015	030	045	060	075	090	105	120	135	150
height (mm)	160	310	460	610	760	910	1,060	1,210	1,360	1,510
number of beams	4	8	12	16	20	24	28	32	36	40
response time (ms)	3.5	4.5	5.5	6	7	8	9	10	10.5	11.5
response time Master + Slave (ms)	Ttot = [0.1104 * (Nr Slave1 + Nr Master) + 1.1044] * 2 (Master + 1 Slave)									
response time Master + 2 Slave (ms)	Ttot = [0.1104 * (Nr Slave1 + Nr Slave2 + Nr Master) + 1.3228] * 2 (Master + 2 Slave)									
Type (1)	2									
SIL(2)	1									
SILCL (3)	1									
PL (4)	c									
PFHd	1.75E-08	2.13E-08	2.47E-08	2.85E-08	3.19E-08	3.57E-08	3.91E-08	4.29E-08	4.63E-08	5.01E-08
DCavg	94.80%	94.00%	93.50%	93.10%	92.80%	92.50%	92.30%	92.10%	91.90%	91.80%
MTTFd (years)	100									
CFF	80%									

(1) ref. CEI EN 61496-1; CEI EN 61496-2 (2) ref. CEI EN 61508:2002 (3) ref. CEI EN 62061 + CEI EN 62061/EC2 (4) ref. UNI EN ISO 13849-1

safety parameters

LS2ER/90-***_	030	045	060	075	090	105	120	135	150
height (mm)	310	460	610	760	910	1.060	1.210	1.360	1.510
number of beams	4	6	8	10	12	14	16	18	20
response time (ms)	3.5	4	4.5	5	5.5	6	6	6.5	7
response time Master + Slave (ms)	Ttot = [0.1104 * (Nr Slave1 + Nr Master) + 1.1044] * 2 (Master + 1 Slave))								
response time Master + 2 Slave (ms)	Ttot = [0.1104 * (Nr Slave1 + Nr Slave2 + Nr Master) + 1.3228] * 2 (Master + 2 Slave)								
Type [1]	2								
SIL[2]	1								
SILCL [3]	1								
PL [4]	c								
PFHd	1.82E-08	2.05E-08	2.27E-08	2.50E-08	2.72E-08	2.95E-08	3.18E-08	3.41E-08	3.63E-08
DCavg	94.70%	94.20%	93.80%	93.50%	93.20%	93.00%	92.80%	92.60%	92.40%
MTTFd (years)	100								
CFF	80%								

LS2ER/**-***_	0A-050	0B-080	0C-090
height (mm)	500	800	900
number of beams	2	3	4
response time (ms)	3	3.5	3.5
response time Master + Slave (ms)	Ttot = [0.1104 * (Nr Slave1 + Nr Master) + 1.1044] * 2 (Master + 1 Slave)		
response time Master + 2 Slave (ms)	Ttot = [0.1104 * (Nr Slave1 + Nr Slave2 + Nr Master) + 1.3228] * 2 (Master + 2 Slave)		
Type [1]	2		
SIL[2]	1		
SILCL [3]	1		
PL [4]	c		
PFHd	1.71E-08	1.87E-08	2.02E-08
DCavg	94.90%	94.60%	94.20%
MTTFd (years)	100		
CFF	80%		

[1] ref. CEI EN 61496-1; CEI EN 61496-2 [2] ref. CEI EN 61508 [3] ref. CEI EN 62061 + CEI EN 62061/EC2 [4] ref. UNI EN ISO 13849-1

electrical diagrams of the connections

LS2 series receiver unit

M12
(8 poles male)

LS2ER / **-***
LS2ER / **-***M

pin	color	signal	type	description
1	WH	OSSD1	OUT	first safety static output (PNP)
2	BN	$24V_{DC}$	POWER	power supply input
3	GN	OSSD2	OUT	second safety static output (PNP)
4	YE	EDM	IN	connection to Restart and/or external control contacts (EDM)
5	GY	Mode_A	IN	selection of the Start/Restart/EDM mode
6	PK	Mode_B	IN	selection of the Start/Restart/EDM mode
7	BU	0V	POWER	supply voltage reference
8	RD	FE	GND	functional earth

8 poles cable

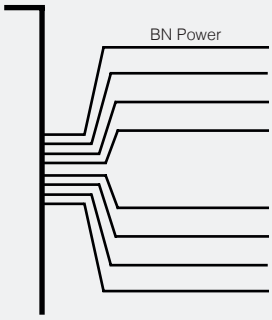

possible combinations

pin4 (YE)	pin5 (GY)	pin6 (RK)	function
$24V_{DC}$	$24V_{DC}$	0V	AUTO
K1 + K2 $+24V_{DC}$	$24V_{DC}$	0V	AUTO + EDM
restart $+24V_{DC}$	0V	$24V_{DC}$	MANUAL
K1 + K2 + restart $+24V_{DC}$	0V	$24V_{DC}$	MANUAL + EDM

BK	black	**OG**	orange
BN	brown	**GN**	green
RD	red	**BU**	blue
YE	yellow	**GY**	grey
WH	white	**VT**	violet
PK	pink		

NOTE: On these Standard and Master models it is possible to choose the operating modes by changing the wiring. By using the EDM function it is possible to extend the safety control to the contactors controlled downstream, that must be the type with guided contacts and approved for safety applications. With this model of curtain you can use the relay module SB300, but the EDM input must be connected.

M12
(5 poles male)

LS2ER / **-***B

pin	color	signal	type	description
1	BN	$24V_{DC}$	POWER	power supply input
2	WH	OSSD1	OUT	range or Test selection input
3	BU	0V	POWER	supply voltage reference
4	BK	OSSD2	OUT	range or Test selection input
5	GY	FE	GND	functional earth

NOTE: These Base models with automatic restart do not have the EDM function, the device downstream must therefore be able to control its own safety integrity independently.
With this model of curtain you can not use the relay module SB300, because the EDM input is not available.

electrical diagrams of the connections

10 poles cable
(IP69K with heater receiver unit)

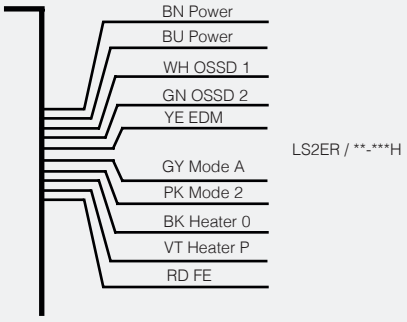

color	signal	type	description
BN	$24V_{DC}$	POWER	power supply input
BU	0V	POWER	supply voltage reference
WH	OSSD1	OUT	first safety static output (PNP)
GN	OSSD2	OUT	second safety static output (PNP)
YE	EDM	IN	connection to Restart and/or external control contacts (EDM)
GY	Mode_A	IN	selection of the Start/Restart/EDM mode
PK	Mode_B	IN	selection of the Start/Restart/EDM mode
BK	Heater 0	POWER	heater supply common
PK	Heater p	POWER	heater supply 24V DC or AC
BK	FE	GND	functional earth

possible combinations

YE	GY	PK	function
$24V_{DC}$		0V	AUTO
K1 + K2 $+24V_{DC}$	$24V_{DC}$	0V	AUTO + EDM
restart $+24V_{DC}$	0V	$24V_{DC}$	MANUAL
K1 + K2 + restart $+24V_{DC}$	0V	$24V_{DC}$	MANUAL + EDM
x	0V		NOT ADMITTED
x	$24V_{DC}$		NOT ADMITTED

NOTE: On these Standard models it is possible to choose the operating modes by changing the wiring. By using the EDM function it is possible to extend the safety control to the contactors controlled downstream, that must be the type with guided contacts and approved for safety applications. The supply voltage of the thermostated heater can be indifferently 24VDC or 24VAC. With this model of curtain you can use the relay module SB300, but the EDM input must be connected.

LS2 series emitter unit

M12
(5 poles male connector)

LS2ER / **-***
LS2ER / **-***M

pin	color	signal	type	description
1	BN	POWER	OUT	power supply input
2	WH	IN	POWER	range or test selection input
3	BU	POWER	OUT	supply voltage reference
4	BK	IN		range or test selection input
5	GY	GND	IN	functional earth

5 poles cable

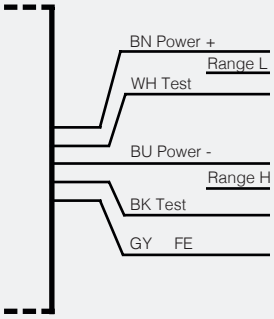

LS2ER / **-***K

possible combinations

pin2 (WH)	pin6 (BK)	function
LO		test
LO	HI	high range
HI	LO	low range
HI		not admitted
Levels: LO = < 5 V or open; HI = 11 to 30 V		

NOTE: The Test contact is necessary only if the safety chain of the receiver downstream must be periodically checked. If the Test is not necessary (the safety light curtain has already been tested independently) replace the contact with direct wiring at +24 V_{DC}.

LS2 series emitter IP68K with heater receiver unit

8 poles cable
(IP69K with heater receiver unit)

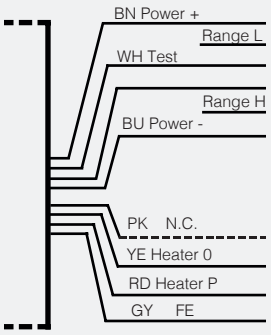

LS2ER / **-***H

color	signal	type	description
BN	$24V_{DC}$	POWER	power supply input
WH	Range L/Test	IN	range or test selection input
BU	0V	POWER	supply voltage reference
GN	Range H/Test	IN	range or test selection input
PK	not connected	N.C.	not connected
YE	heater 0	POWER	heater supply common
RD	heater P	POWER	heater supply 24V DC or AC
GY	FE	GND	functional earth

possible combinations

WH	GN	function
LO		test
LO	HI	high range
HI	LO	low range
HI		not admitted
Levels: LO = <5V or open; HI = 11 to 30V		

NOTE: The Test contact is necessary only if the safety chain of the receiver downstream must be periodically checked. If the Test is not necessary (the safety light curtain has already been tested independently) replace the contact with direct wiring at + 24 V_{DC}. The supply voltage of the thermostated heater can be indifferently 24 V_{DC} or 24 V_{AC}. The PK cable is not connected internally.

LS2 series emitter and receiver unit : master slave secondary connecotrs

M12
(5 poles male)

LS2ER / **-***M
LS2ER / **-***S
LS2ER / **-***F

pin	color	signal	type	description
1	BN	$24V_{DC}$	POWER	power supply (supply line for the upstream device)
2	WH	Line 1	IN/OUT	communication line 1
3	BU	0V	POWER	power supply reference (supply line for the upstream device)
4	BK	Line 2	IN/OUT	communication line 2
5	GY	FE	GND	functional earth

NOTE: Preferably use Female/Female pre-wired extension cables (it is not permitted to access the connection lines).

dimensions (mm)

Dimensions of Standard, Base, Final models; view of the base and head with relevant connectors; see Tab.:1 and 3

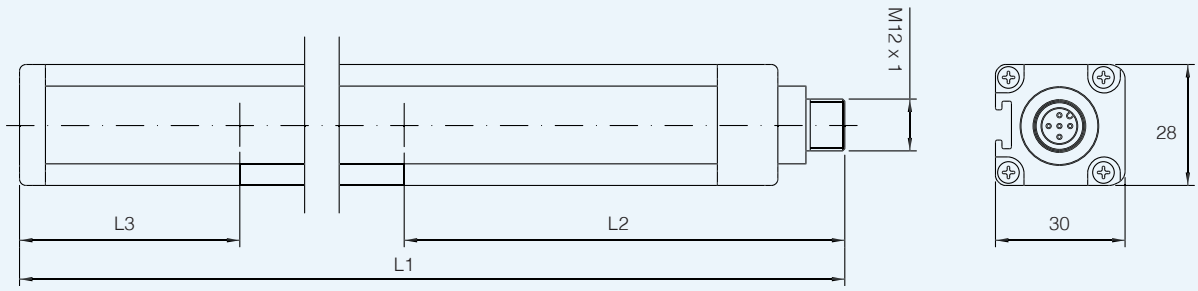

dimensions (mm)

Dimensions of Master and Slave models; view of the base and head with relevant connectors; see Tab.: 2 and 3 (mm)

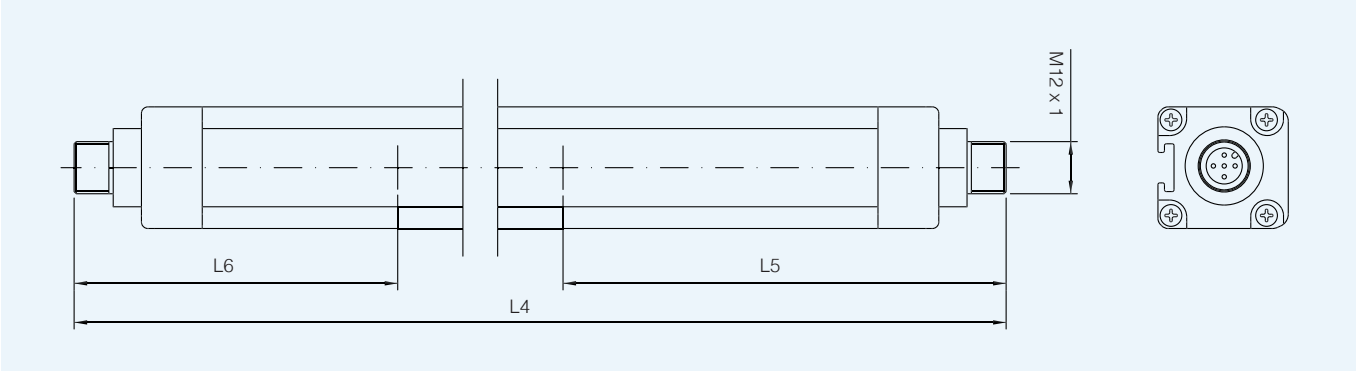

TAB.1

LS2 series		size models with rays terraced										
paired models		***										dimensions (mm)
		015	030	045	060	075	090	105	120	135	150	
LS2ER/**-*** LS2ER/**-***B LS2ER/**-***F	standard, base, final	213	363	513	663	813	963	1,113	1,263	1,413	1,563	L1
		61.5										L2 (bottom-most beam)
		11										L3 (top-most beam)
LS2ER/**-***M LS2ER/**-***S	master and slave	236.5	386.5	536.5	686.5	536.5	986.5	1,136.5	1,286.5	1,436.5	1,566.5	L4
		61.5										L5 (bottom-most beam)
		34.5										L6 (top-most beam)

TAB.2

LS2 series		size models with multiple beams			
paired models		***			dimensions (mm)
		0A-050	0B-080	0C-090	
LS2ER/**-*** LS2ER/**-***B LS2ER/**-***F	standard, base, final	653	953	1,053	L1
		102			L2 (bottom-most beam)
		51			L3 (top-most beam)
LS2ER/**-***M LS2ER/**-***S	master and slave	677	977	1,077	L4
		102			L5 (bottom-most beam)
		75			L6 (top-most beam)

TAB.3

LS2 series		termination types and connectors							
models		LS2R (receiver)				LS2R (emitter)			
		base view	connector	base view	connector	base view	connector	vista base	connector
LS2ER/**-***	standard	C	M12, 8p, M	A	-	B	M12, 5p, M	A	-
LS2ER/**-***B	base	B	M12, 5p, M	A	-	B	M12, 5p, M	A	-
LS2ER/**-***F	final	B (1)	M12, 5p, M	A	-	B (1)	M12, 5p, M	A	-
LS2ER/**-***M	master	F	M12, 8p, M	D (1)	M12, 5p, M	E	M12, 5p, M	D (1)	M12, 5p, M
LS2ER/**-***S	slave	E (1)	M12, 5p, M	D (1)	M12, 5p, M	E (1)	M12, 5p, M	D (1)	M12, 5p, M

NOTE: These connectors are dedicated to a communication BUS of the Master/ Slave chain, it is not permissible to access the lines, always use cord sets.

accessories

ST204* / outfit mounting accessories			
product	to used with	dimensions (mm)	description / installation
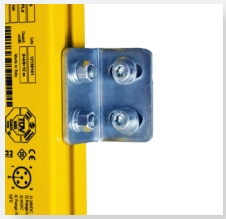	LS2 series	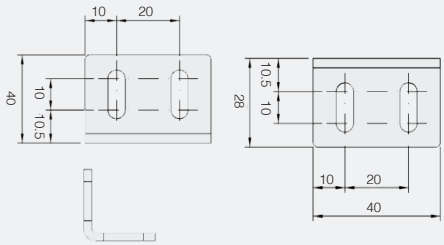	L Bracket Supplied as standard, 4 pieces to couple to the length from 300 to 1,050, 6 pieces for the length from 1,200 to 1,500.
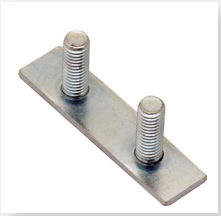	LS2 series	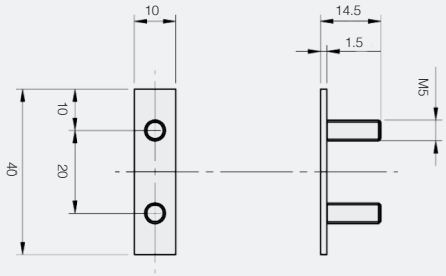	Insert with threaded bolts and nuts Supplied as standard, in a number corresponding to the brackets.

outfit brackets mounting

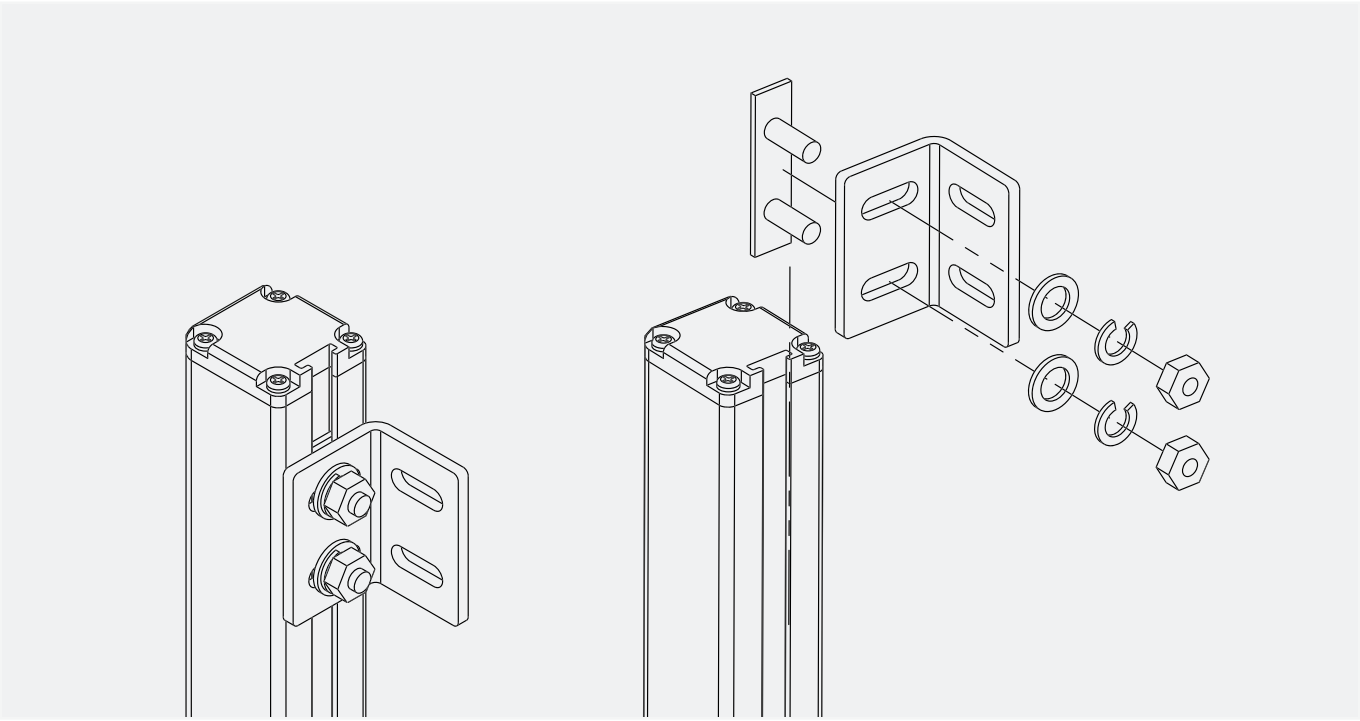

dimensions (mm)

IP69K models

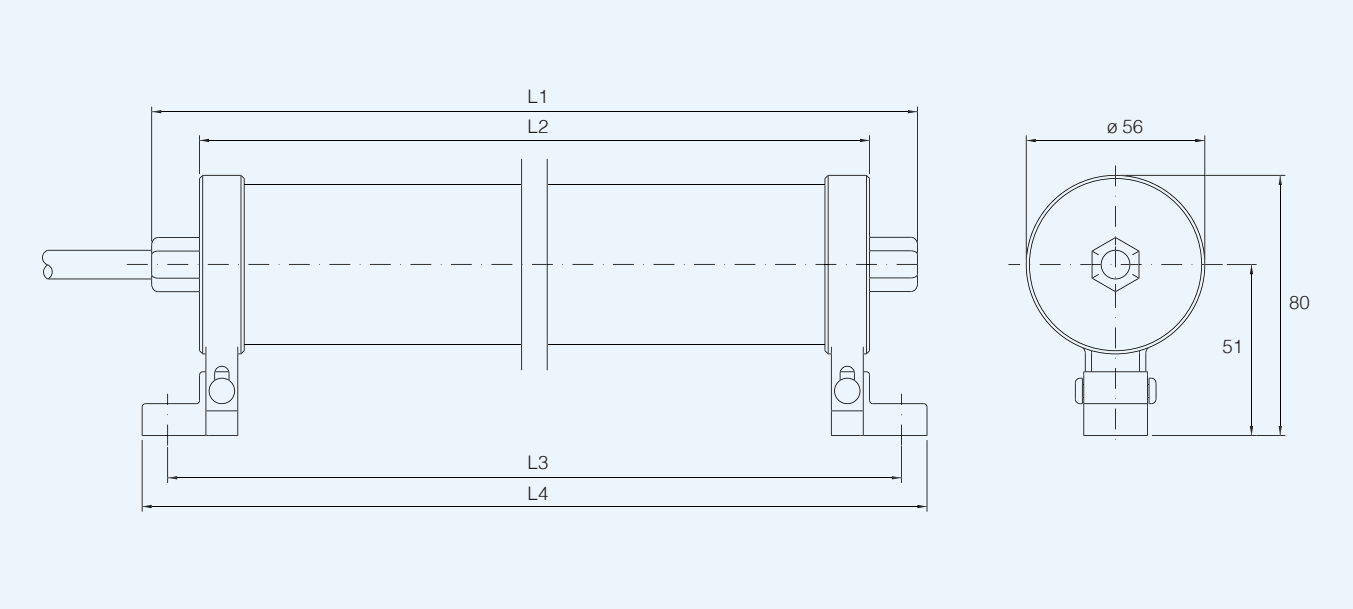

The light Curtain is supplied already fitted inside the transparent housing.
The power cord has a standard length of 10 meters and a maximum diameter of 6 mm. The brackets are included.

models	150	300	450	600	750	900	1,050	1,200	1,350	1,500	2B	3B	4B
L1 dimensions (mm)	320	470	620	770	920	1,070	1,220	1,370	1,520	1,670	760	1,060	1,160
L2 dimensions (mm)	290	440	620	740	890	1,040	1,190	1,340	1,490	1,640	730	1,030	1,130
L3 (± 3) dimensions (mm)	315	465	590	765	915	1,065	1,215	1,365	1,515	1,665	755	1,055	1,155
L4 dimensions (mm)	337	487	637	787	937	1,087	1,237	1,387	1,537	1,687	777	1,077	1,177